The copyright to this drawing belongs to us. No duplication or transfer to, providing access to or communicating to any third parties is allowed of its contents or excerpts thereof. This drawing may not be used without our approval for any purpose other than that for which it has been entrusted to the recipient. Any non-compliance shall obligate the violator to compensate for damages. In case any patent is issued or a utility model is registered, or in case of any other industrial property rights, all such rights must be reserved for us.

BEDIA Motorentechnik GmbH & Co.KG,
Altdorf bei Nürnberg

Das Urheberrecht an dieser Zeichnung gehört uns. Vervielfältigung, Überlassung, Zugänglichkeit oder Mitteilung des Inhalts, auch auszugsweise, an Dritte ist nicht gestattet. Die Zeichnung darf ohne unsere Zustimmung, zu einem anderen Zweck als sie dem Empfänger anvertraut wird, nicht benutzt werden. Zuwiderhandlung verpflichtet zu Schadenersatz. Alle Rechte, für den Fall einer Patenterteilung, Gebrauchsmustereintrag oder anderer Schutzrechte, sind uns vorbehalten.

Technical data

Medium	water, coolant
Function	maximum - operating current (oc)
Operating voltage	12 / 24 V (-25% / +50%) (9 - 36 VDC)
Current consumption	< 8 mA
Output	low side switch ≤ 1 A over the whole temperature range short-circuit and overload protected over the ambient temperature range. At inductive loads freewheeling diode e.g. 1N4007, has to be mounted at the load.
Mounting thread	M14x1,5
Function control	0 seconds ±5%
Fault indication delay	0 seconds ±5%
Connection	connector fine thread 5/8" UNEF
Housing material	CuZn38Pb2 EN12164; CW608N capacitive connected to ground
Probe coating	Tefzel® ETFE
Probe protection	IP 67 according to DIN 40050 with mounted mating connector
Weight	approx. 90 g
Marking	manufacturer; type; manufacturer no.; SN; year / week; approval
Switch point hysteresis	< 3 mm
Medium temperature	-40°C to +125°C (-40°F to +257°F)
Ambient temperature	-40°C to +125°C (-40°F to +257°F)
Storage temperature	-50°C to +125°C (-58°F to +257°F)
Mounting position	optional
Reverse polarity protection	inbuilt between positive and negative terminal

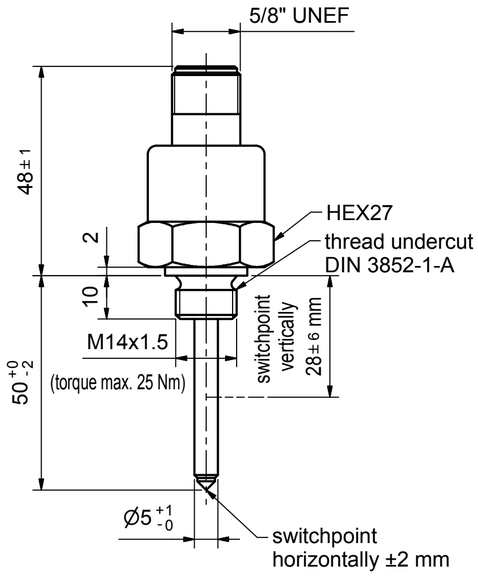

Block diagram

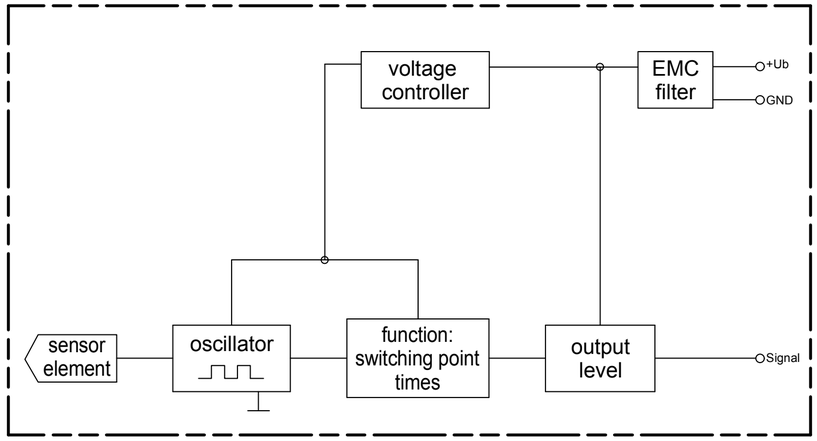

Functional diagram for MAXIMUM Probes

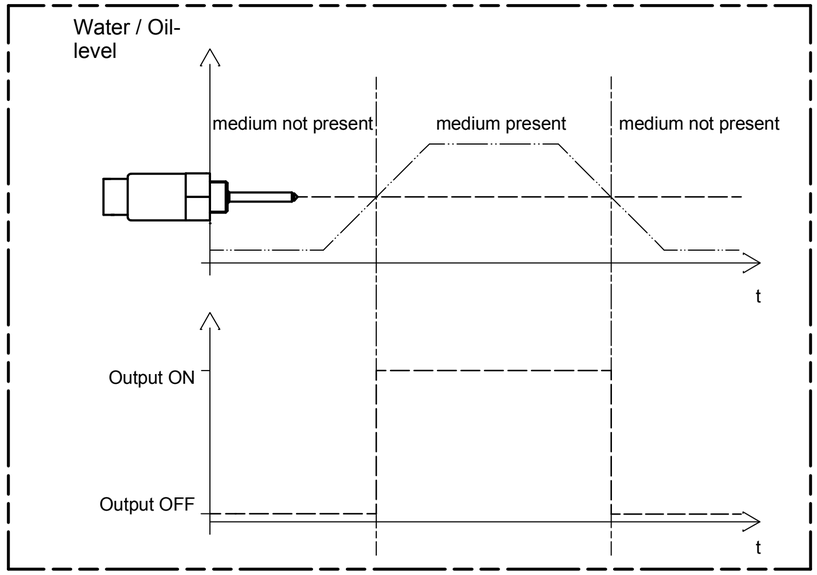

Caution!!
Do not connect negative potential to signal terminal of the sensor and positive potential to negative terminal of the sensor.

Approval	E1	10R-03 5459
Customs tariff number	90261029	

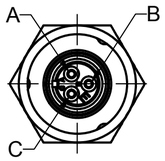

A = positive (+)
B = negative (-)
C = signal (S)

Environmental simulations

Vibration	ISO 16750-3:2007	10 Hz - 2000 Hz 20 g
Free Fall	IEC 16750	
Mechanical Shock	DIN EN 60068-2-27:1995; 100 g / 11 ms	
Dry Cold	DIN EN 60068-2-1:2006; -40°C / 24 h (-40°F / 24 h)	
Dry Heat	DIN EN 60068-2-2:2008; +125°C / 96 h (+257°F / 96 h)	
Temperature cycling	DIN EN 60068-2-14:2000	
Damp Heat	DIN EN 60068-2-78:2002	
Damp Heat, steady state	DIN EN 60068-2-30:2006	
Salt spray	DIN EN 60068-2-52:1996	
Pressure resistance	2,5 MPa (25 bar / 362,6 psi) (25°C / 77°F / 1 h)	

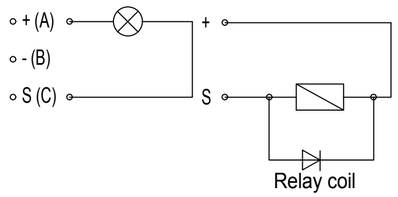

EMC

Radiated emission	2004/104/EG	30 MHz - 1 GHz; 1 m
Conducted transient emission	ISO 7637-2:2004	
Immunity to RF electromagnetic fields	ISO 11452-1/-2	1000 MHz - 2000 MHz; 150 V / m (rms)
Immunity to RF electromagnetic fields in the stripline	ISO 11452-1/-5	20 MHz - 1000 MHz; 150 V / m (rms)
Transient immunity test on power lines	ISO 7637-2/2004	pulses 1, 2a, 2b, 3a, 3b, 4

Zul. Abweichung / admissible tolerance	Oberfläche / surface	Maßstab / scale 1:1	Sprache / language ENU	Blatt / sheet 1 /1
ISO2768-mK	-	-	-
	-	-	-

	Datum / date	Name / name
Erstellt / created by	02.02.2018	MoeMi
Geprüft / checked by	05.02.2018	BonPa
Format / Size A2	Maßeinheit / dimension unit in [mm]	

Benennung / description
CLS-40 water level sensor
low side switch - operating current
with connector fine thread 5/8" UNEF

BEDIA®

Zeichnungsnummer / drawing number: 350187

Zng. Art/ drw.type: DRC

Zust. / rev.	Änderung/modification	Datum/date	Name/Geprüft checked by