DO NOT SCALE	IF IN DOUBT PLEASE ASK	ENGINEERING STANDARDS ARE REFERENCED AS 5-3-05-05- SERIES,IF IN DOUBT, PLEASE REQUEST LATEST ISSUE.	PROJECT No:- 076943-01	TEST SPEC No:- TS076943-01
			PERFORMANCE GRAPH No:- G11367	

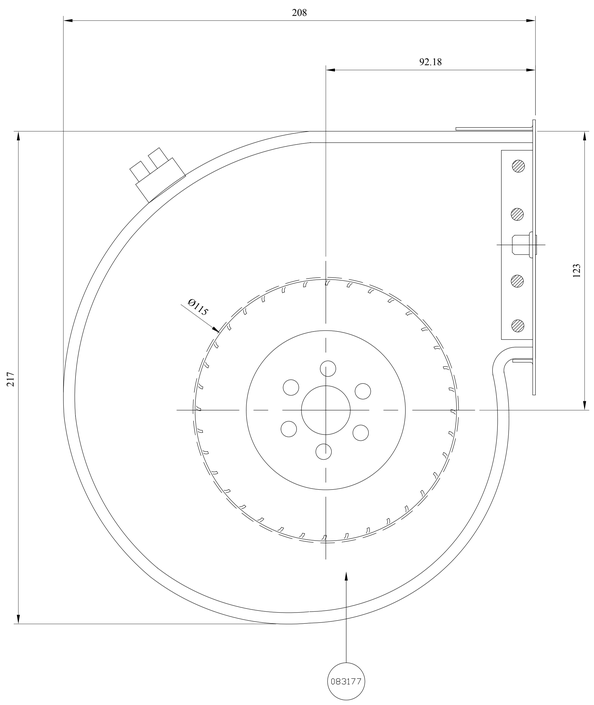

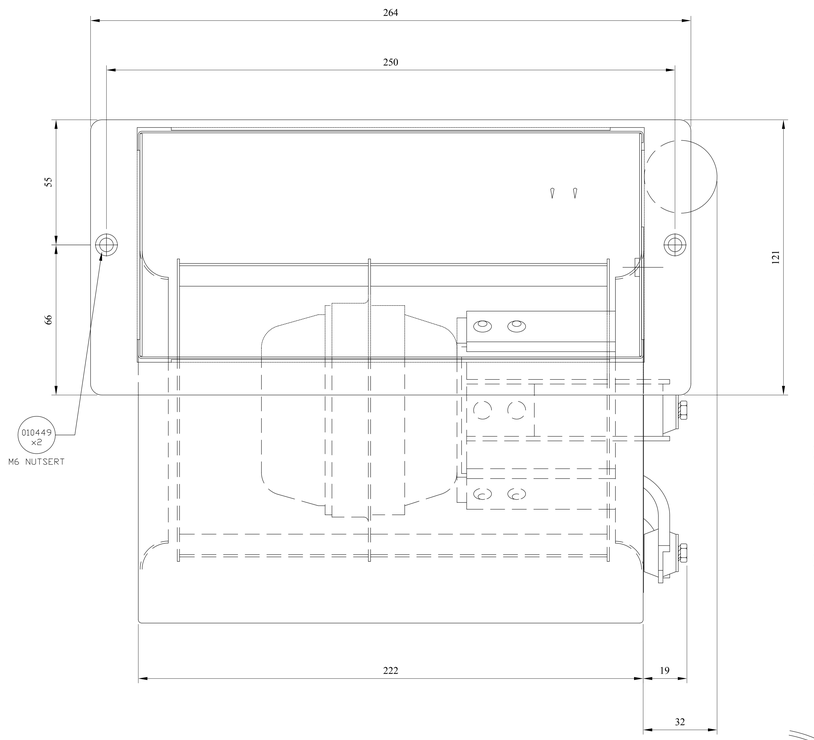

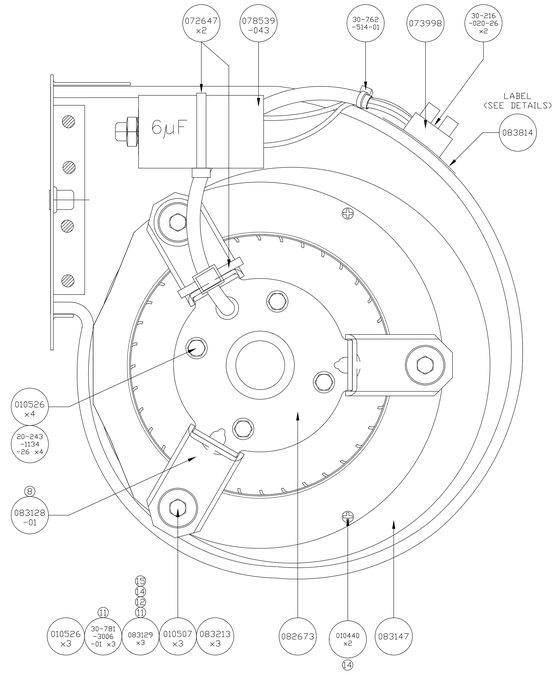

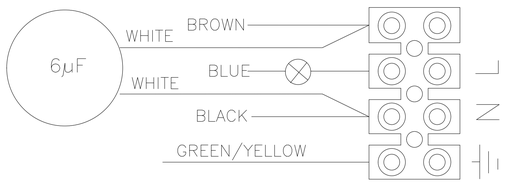

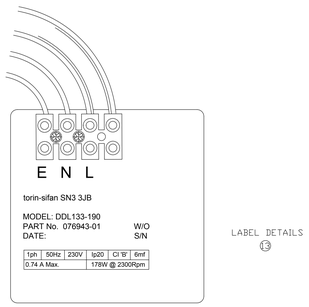

LABEL DETAILS
13

UNTOLERANCED DIMENSIONS ARE FOR REFERENCE PURPOSES ONLY.
IMPELLER/MOTOR ASSEMBLY IS BALANCED TO ISO1940 G2.5 @ 2300 RPM.

ISS.	MODIFICATION	DATE	C/N NO.
15	SPACER CHANGED FROM CF31405-11 TO 083129.	27/03/12	18707
14	010440 WAS 30-216-015-26 CF31405-11 WAS 083129	21/9/11	18513
13	PICTORIAL CHANGE TO LABEL	18/11/09	17966A
12	SPACER CHANGED FROM CF31405-11 TO 083129.	22/04/09	17685
11	SPACER CHANGED FROM 083129 TO CF31405-11. GROMMET CHANGED FROM 083130 TO 30-781-3006-01. BALLOON REF'S ADDED.	09/06/08	17495
10	RAISED TO ISSUE 10 DUE TO MRP ERROR	10/11/05	16803
9	SEE ISSUE 10		
8	MOTOR MTG BRKT CHANGED TO 083128-01	18/3/03	16120
G		14/3/02	15956
F		11/12/01	15900
E		6/11/01	15813
D		31/8/00	15611
C		6/7/00	15602
B	WIRE DIAG	9/6/00	
A	ISSUED	5/6/00	

MATERIAL

GALVANISED STEEL

FINISH

NATURAL

FIRST USED ON

SIMILAR TO

DIRECTORY PATH

\\ASY\DDL\133-190\

TITLE

FINAL ASSEMBLY OF DDL133-190 230/1/50

DRAWING NO.

076943-01

torin-sifan
The Partner of Choice

Torin Limited
Drakes Way
Swindon Wiltshire
SN3 3JB
Tel : (01793) 524291

INFORMATION CONTAINED IN THIS DOCUMENT IS CONFIDENTIAL TO TORIN LIMITED AND MAY NOT BE DISCLOSED OR REPRODUCED IN WHOLE OR IN PART WITHOUT THEIR WRITTEN CONSENT.

© TORIN LIMITED

PROJECTION	DR. J.M.	CHKD	AP.	A2
	DATE 5/6/00	DATE	DATE	
DRAWING GENERALLY CONFORMS TO BS 8888	DIMENSIONS IN MILLIMETRES			
ALL BS TO LATEST ISSUE	SCALE: 1:2 (UNLESS OTHERWISE STATED)			

076943-01

DRAWING NO.

EP24/4-A2