DO NOT SCALE	IF IN DOUBT PLEASE ASK	PROJECT No:-	TEST SPEC No:-TS076072	ALPHA ISSUES RECORD PRE-PRODUCTION CHANGES
		PERFORMANCE GRAPH No:-AMP9225		

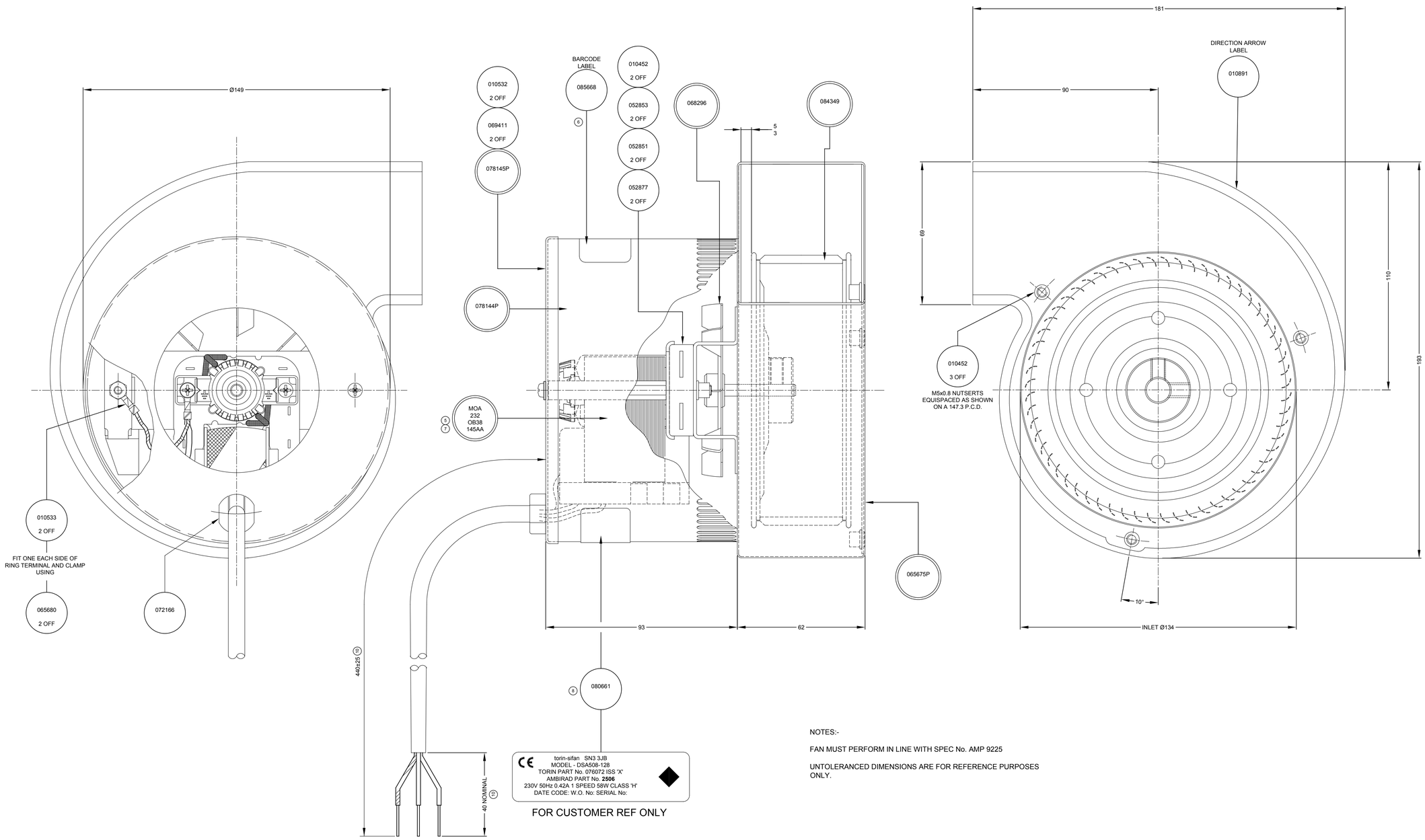

NOTES:-

FAN MUST PERFORM IN LINE WITH SPEC No. AMP 9225

UNTOLERANCED DIMENSIONS ARE FOR REFERENCE PURPOSES ONLY.

DRAWING NO. 076072

ISS.	MODIFICATION	DATE	C/N NO.
10	REMOVE CONNECTOR FROM LEAD ASSEMBLY.	18/10/18	20297
9	LABEL MODIFIED, GRAPH No. ADDED.	05/06/14	19285
8	PRODUCT LABEL CONTENT MODIFIED	12/01/11	18314
7	MOTOR CODE WAS MOA-200AC	14/12/10	18290
6	085668 BARCODE LABEL ADDED	04/05/10	18081
5	MOTOR CODE WAS MOA-145AA	23/03/10	18053
4	PICTORIAL UPDATE ONLY. WRAP NOTCH MOVED, ENLARGED.	01/10/08	17579
3	DRG UPDATED	30/11/05	16817
2	ALUDIP IMPELLER INTRODUCED	29/09/03	16254
A	FIRST ISSUE	18/10/95	14419

MATERIAL

CASE:- GALVANISED STEEL
IMPELLER:- ALUDIP

FINISH

CASE:- PAINTED BLACK
IMPELLER:- NATURAL

FIRST USED ON
AMBIRAD

SIMILAR TO

DIRECTORY PATH
\\ASY\DSA\508-128\

TITLE

FINAL ASSEMBLY OF DSA508-128 230V ~ 50Hz 58W CLASS 'H'

DRAWING NO.

076072

torin-sifan
The Partner of Choice
Greenbridge, Swindon, Wiltshire, UK SN3 3JB
Tel: +44 (0) 1793 524 291
Email: sales@torin-sifan.com

INFORMATION CONTAINED IN THIS DOCUMENT IS CONFIDENTIAL TO TORIN-SIFAN LIMITED AND MAY NOT BE DISCLOSED OR REPRODUCED IN WHOLE OR IN PART WITHOUT THEIR WRITTEN CONSENT. DETAIL SUBJECT TO CHANGE WITHOUT PRIOR NOTICE.

© TORIN-SIFAN LIMITED

PRODUCT TYPE: SMALL BLOWER

TECH 1: AC ■ EC ☐

TECH 2: AC ■ BD ☐ CP ☐ DC ☐ ECI ☐ ECR ☐

ERP DIRECTIVE: N | Ng/EN ARTICLE: A13C1

PROJECTION

DRAWING GENERALLY CONFORMS TO BS 8888

ALL BS TO LATEST ISSUE

DR.	CHKD	AP.	
MB			A1
DATE 18/10/95	DATE	DATE	

DIMENSIONS IN MILLIMETRES

SCALE: 1:1 (UNLESS OTHERWISE STATED)

DRAWING NO. 076072

EP24/8-A1